DR. BABASAHEB AMBEDKAR TECHNOLOGICAL UNIVERSITY, LONERE

Regular End Semester Examination – Summer 2022

Course: B. Tech. **Branch : Civil** **Semester : IV**

Subject Code & Name: BTCVC403 Structural Mechanics -I

Max Marks: 60 **Date:** 22/08/2022 **Duration: 3.45 Hr.**

Instructions to the Students:

1. *All the questions are compulsory.*
2. *Figures to right indicates full marks.*
3. *Use of non-programmable scientific calculators is allowed.*
4. *Assume suitable data wherever necessary and mention it clearly.*

		(Level/CO)	Marks
Q. 1	**Solve Any Two of the following.**		
A)	State and Explain Moment area theorem's.	Knowledge	**6**
B)	Find the deflection at free end of cantilever beam shown in fig 1. If cross section of beam is 100 mm wide and 200 mm deep. Take E = 11 Gpa	Analysis	**6**

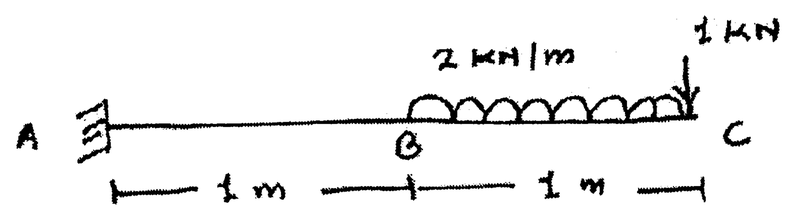

Fig (1)

C)	Compute the max deflection of beam shown in fig 2 Take E = 2 x 10^5 Mpa and I = 3 x 10^7 mm^4. Use conjugate beam method.	Application	**6**

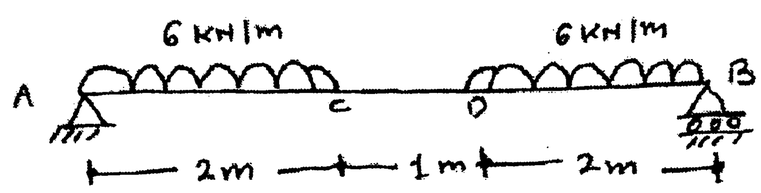

Fig (2)

Q.2	**Solve Any Two of the following.**		
A)	Derive the expression for strain energy due to traction.	Understand	**6**
B)	Determine the deflection at point C and B. of fig 3	Application	**6**

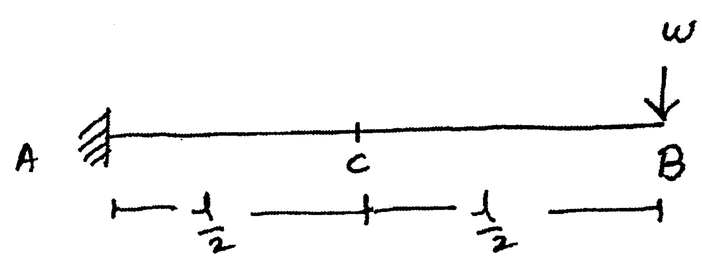

Fig (3)

C)	A simply supported beam AB of span 8 m carries udl of 20 KN/m over the right hand of beam using castigliano's first theorem calculate deflection at mid span EI = 32000 Kn-m^2	Analysis	**6**
Q. 3	**Solve Any Two of the following.**		
A)	Explain Castigliano's first theorem.	Remember	**6**

B)	A fixed beam AB of span 15 m two couples 20 KN-m and 30 KN-m are acting at 5m and 7.5 from left side respectively. Find the fixed end moments.	Analysis	**6**
C)	Explain the procedure for analysis of indeterminate beams.	Knowledge	**6**

Q.4 Solve Any Two of the following.

A)	Define Stiffness, relative stiffness, carry over factor, and distribution factor	Remember	**6**
B)	Analyze the beam as shown in fig.4 by moment distribution method.	Analysis	**6**

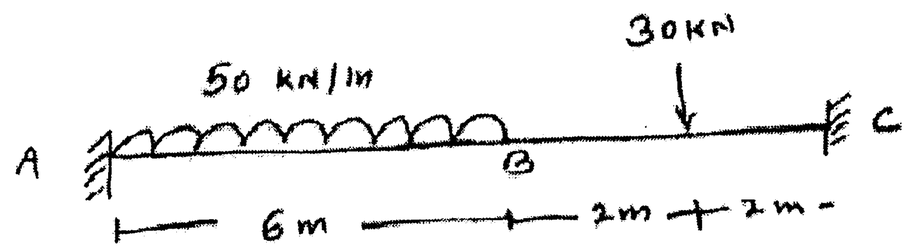

Fig (4)

C)	Draw SFD and BMD of frame as shown in fig 5 if Ma = 3.43 Kn-m and Mb = 6.86 Kn-m clockwise at beam AB.	Analysis	**6**

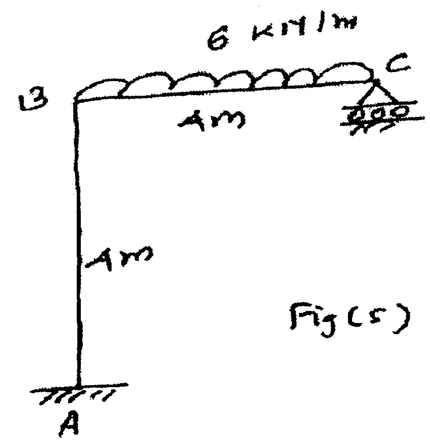

Fig (5)

Q. 5 Solve Any Two of the following.

A)	Analyze propped cantilever as shown in fig 6 by slope deflection method draw SFD and BMD.	Analysis	**6**

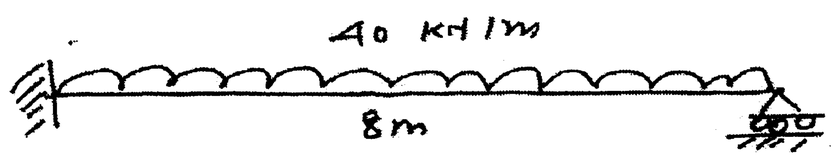

Fig (6)

B)	Using slope deflection method, analyze the frame as shown in fig 7 draw BMD.	Analysis	**6**

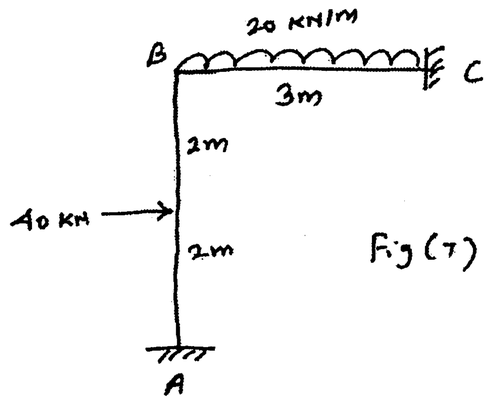

Fig (7)

C)	Explain the procedure for analysis of continuous beam with sinking of supports by slope deflection method.	Synthesis	**6**

End

DR. BABASAHEB AMBEDKAR TECHNOLOGICAL UNIVERSITY,

LONERE – RAIGAD – 402 103

End Semester Examination – Summer 2019

Branch: B. Tech in Civil Engineering **Semester: IV**
Subject Name: Structural Mechanics I **Subject Code: BTCVC 403**
Max. Marks: 60 **Date: - 20/05/2019** **Duration: 3 Hrs.**

Instructions to the Students

1. ***Attempt any five questions out of the following.***
2. *The level questions/ expected answer as per OBE or the course outcome (CO) on which the question is based is mentioned in ( ) in front of the question.*
3. *Use of non-programmable scientific calculators is allowed.*
4. *Assume suitable data wherever necessary and mention it clearly.* ***For all numerical use E = 210 GPa and I = 500 x 10^{-6} m^4 wherever essential.***
5. *Illustrate your answers with neat sketches, diagram etc., wherever necessary.*

		(Level / CO)	Marks
Q. 1 (a)	Define degree of static indeterminacy and degree of kinematic indeterminacy of a structure. Write and explain equation of the degree of static indeterminacy of beam.	**L 2**	**04**
Q. 1 (b)	Analyse the beam as shown in figure 1 using Castigliano's theorem and hence find vertical deflection and slope at the free end.	**L 4**	**08**

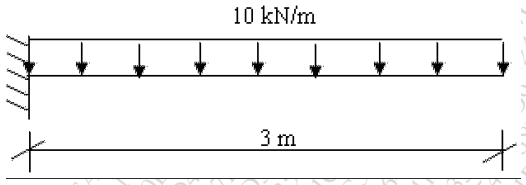

Figure 1

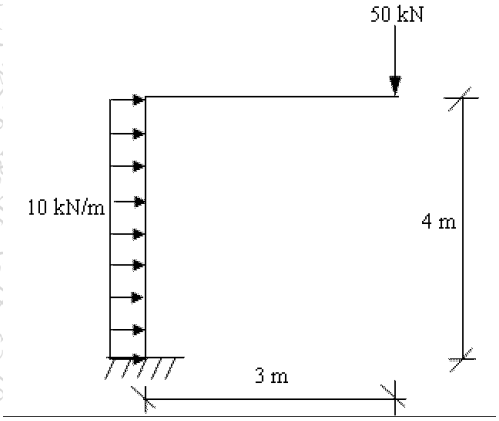

Figure 2

Q. 2	Analyse the rigid jointed frame as shown in the figure 2 using Virtual Work method and hence find the slope and vertical deflection at the free end.	**L 4**	**12**
Q. 3 (a)	Analyse the propped cantilever shown in figure 3 using moment area method and hence draw the bending moment diagram. Span of beam is 4 m.	**L 4**	**06**

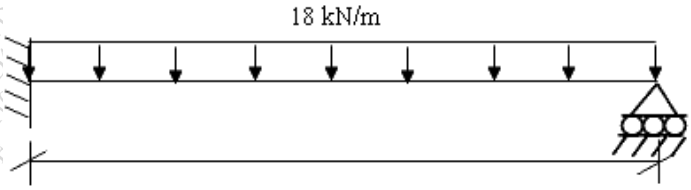

Figure 3

OR

Q. 3 (a)	A fixed beam of span 10 m carries two point loads of 50 kN and 60 kN acting at 3 m and 6 m from left support. Find the fixed end moments and hence draw SFD and BMD.	**L 4**	**06**
Q. 3 (b)	Analyse the continuous beam as shown in figure 4 using theorem of three moments and hence draw the SFD and BMD.	**L 4**	**06**

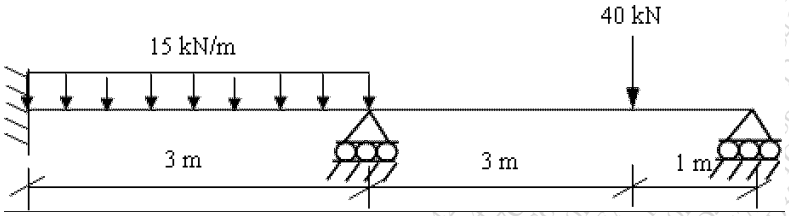

Figure 4

Q. 4	Analyse the rigid frame as shown in figure 5 using slope deflection method and hence draw the BMD. *I of columns = 2I of beam.* The downward settlement of foundation at right side is 10 mm.	**L 4**	**12**

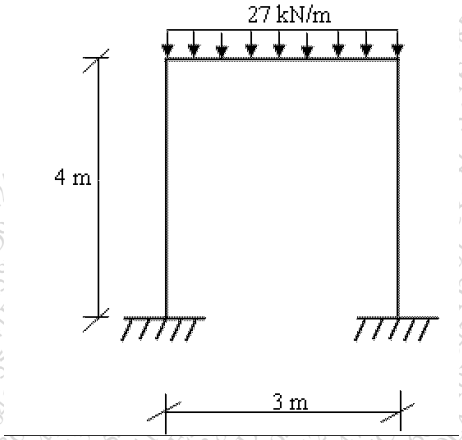

Figure 5

OR

Q. 4	Analyse the continuous beam as shown in figure 6 using Slope Deflection method and hence draw SFD and BMD. EI = constant.	**L 4**	

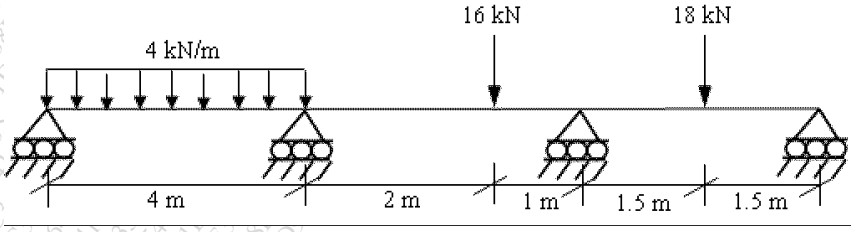

Figure 6

Q. 5 Analyse the beam as shown in figure 7 using Moment Distribution method and hence draw SFD and BMD. **L 4** **12**

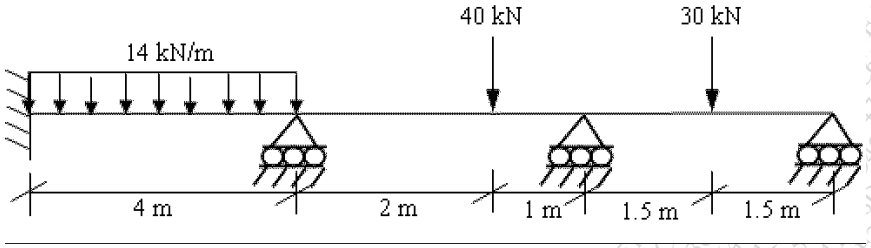

Figure 7

Q. 6 (a) Wall thickness of a cylindrical shell of 800 mm internal diameter and 2 m long is 10 mm. If the shell is subjected to an internal pressure of 2 MPa, find circumferential stress, longitudinal stress and maximum shear stress. **L 4** **06**

Q. 6 (b) A cast iron pipe of 240 mm inside diameter and 15 mm thickness is closely wound with a layer of 4 mm diameter steel wire under a stress of 30 MPa. Find the stresses in the pipe and the steel wire when water is admitted into the pipe at a pressure of 4 MPa. For steel E = 210 GPa, cast iron E= 105 GPa, Poisson's ratio is 0.3. **L 4** **06**

OR

Q. 6 (b) A cylindrical shell of length 1m and internal diameter 150 mm has a thickness of 10 mm. If the shell is subjected to internal pressure of 3 N/mm2, find change in diameter, change in length and change in volume. E = 210 GPa, μ = 0.3. **L 4** **06**

END

DR. BABASAHEB AMBEDKAR TECHNOLOGICAL UNIVERSITY, LONERE

Supplementary Winter Semester Examination : Nov.- 2019

Course: *B. Tech in Civil Engineering* **Sem: IV**

Subject :*Structural Mechanics I* (BTCVC403) **Max Marks:60**

Date:30/11/2019 **Duration: 3 Hr.**

Instructions to the Students:

1. *Solve **ANY FIVE** questions out of the following.*
2. *Use of non-programmable scientific calculators is allowed.*
3. *Assume suitable data wherever necessary and mention it clearly.*
4. *Solve All Questions in **Sequential** order.*

Marks

Q. 1 Solve the following. **12**

A) Find Static and Kinematic Indeterminacy of the structure as shown in Fig No 1 **06**

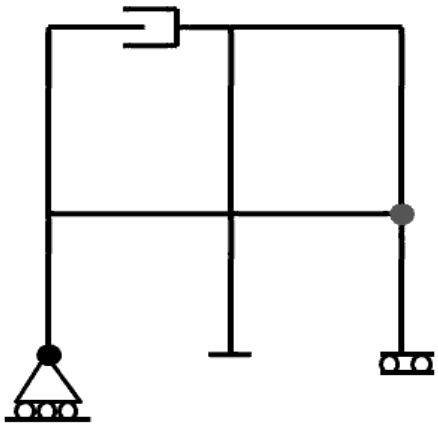

Fig No 1

B) Find Static and Kinematic Indeterminacy of the structure as shown in Fig No 2 **06**

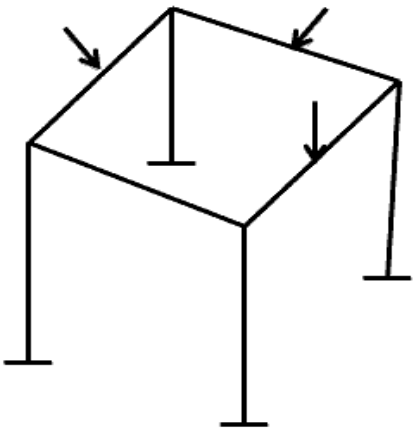

Fig No 2

9F03528824E80F025CFED233841BE0C2

Q.2 Solve the following. **12**

A) A Beam AB is Simply Supported over a span 5m in length. A Concentrated load of 30kN is acting at section 1.25m from support A .Calculate the deflection under the point load .Also calculate the deflection at the center of the beam and Slope at end A for the beam. Take E = 200,000 MPa and I = 13 $*10^{-6}$ m^4.

Q. 3 Solve the following. **12**

A) Draw the Bending Moment diagram, Elastic curve, location of Point of contraflexture and maximum deflection for a Fixed beam subjected to UDL 5kN/m over a span of Length 10m. EI is Constant

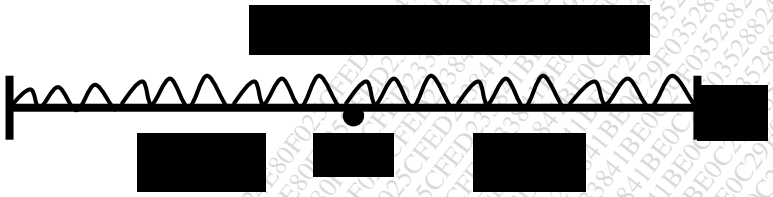

Q.4 Solve the following. **12**

A Continuous Beam ABC is Supported at A, B, C. Span AB= 6m, Span BC = 5m. Span

A) AB carries a UDL of 30kN/m and Span BC Carries a UDL of 25kN/m. Calculate the Support moments and draw SFD, BMD by Hardy Cross Method. **06**

B) Draw BMD and SFD for the Beam as Shown in Figure. Also Find the reactions at Support. Use theorem of Three moments. **06**

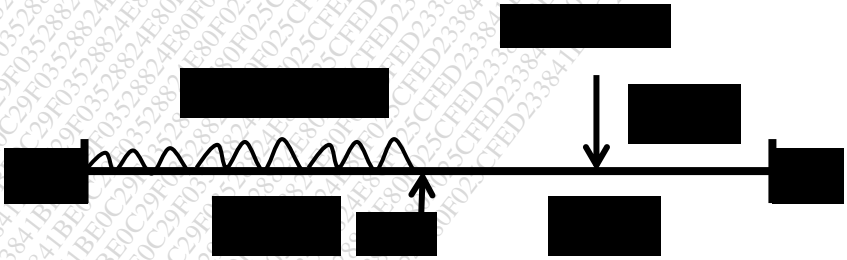

Q. 5 Solve the following. **12**

A) Determine the Support moments for the continuous beam as shown in fig below. The Relative values of MI are as shown in fig below. Use Slope Deflection method. Take E as constant.

9F03528824E80F025CFED233841BE0C2

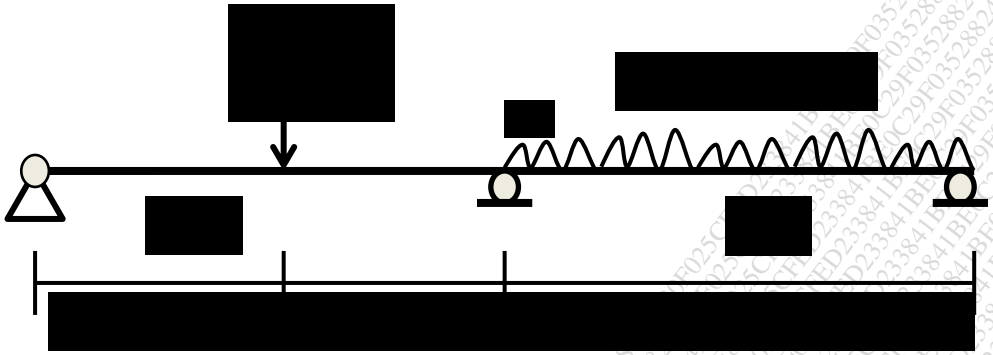

Q. 6 Solve the following. **CO 5** **12**

A) A Gas Cylinder of internal diameter 40mm is 5mm thick. If the tensile stress in the material is not to exceed 30Mpa, Find the maximum pressure which can be allowed in the cylinder. **6**

B) A cylindrical vessel 2 m long and 500 mm in diameter with 10 mm thick plates is subjected to an internal pressure of 03 MPa. Calculate the change in the volume of the vessel. Take E= 500GPa and poissons ratio =0.3 for the vessel material **6**

***** End of the paper *****

9F03528824E80F025CFED233841BE0C2

DR. BABASAHEB AMBEDKAR TECHNOLOGICAL UNIVERSITY, LONERE

Bachelor of Technology (Civil Engineering) SEMESTER - 4 Summer 2025 (Regular)

Course :Bachelor of Technology (Civil Engineering) Branch : Engineering and Technology

Semester : SEMESTER - 4

Subject Code & Name: BTCVC403 - STRUCTURAL MECHANICS - I

Time : 3 Hours] **[Total Marks : 60**

Instructions to the Students:

1. Each question carries 12 marks.
2. Question No. 1 will be compulsory and include objective-type questions.
3. Candidates are required to attempt any four questions from Question No. 2 to Question No.6
4. Use of non-programmable scientific calculators is allowed.
5. Assume suitable data wherever necessary and mention it clearly.

Q1. Objective type questions. (Compulsory Question) 12

1 The deflection at the free end of a cantilever beam subjected to a point load □ at the free end is given by ----

a) $PL^3/3EI$ b) $PL^4/3EI$ c) $PL^3/6EI$ d) $PL^2/3EI$

2 A simply supported beam of length L carries a uniform load w per unit length. The deflection at the mid-span of the beam is----

a) $5WL^4/384EI$ b) $WL^4/384EI$ c) $WL^3/48EI$ d) $WL^3/24EI$

3 In cantilever beams, slope and deflection at the fixed end are -----

Zero and Max. b) Zero, Zero c) Max. and Zero d) Max. and 1

4 If the member is denoted by m and joints by j, the condition for a frame to be redundant is given by

a) $m < 2j + 3$ b) $m < 2j - 3$ c) $m = 2j - 3$ d) $m > 2j - 3$

5 A plane frame has 15 members and 10 joints. It is fixed at both ends. The degree of static indeterminacy of the frame is ---------

a) 2 b) 3 c) 6 d) 9

6 In the moment distribution method, the sum of distribution factors at any joint is always -------

a) = 0 b) = 1 c) >1 d) <1

7 In the moment distribution method, when considering a continuous beam, carry-over factor for the moment at the end of the beam is---

a) 1.00 b) 0.5 c) 0.25 d) 0.75

8 The degree of external static indeterminacy for propped cantilever beam subjected to general loading is-----

a) 2 b) 3 c) 6 d) 9

9 *Which one of the following structures is stable?*

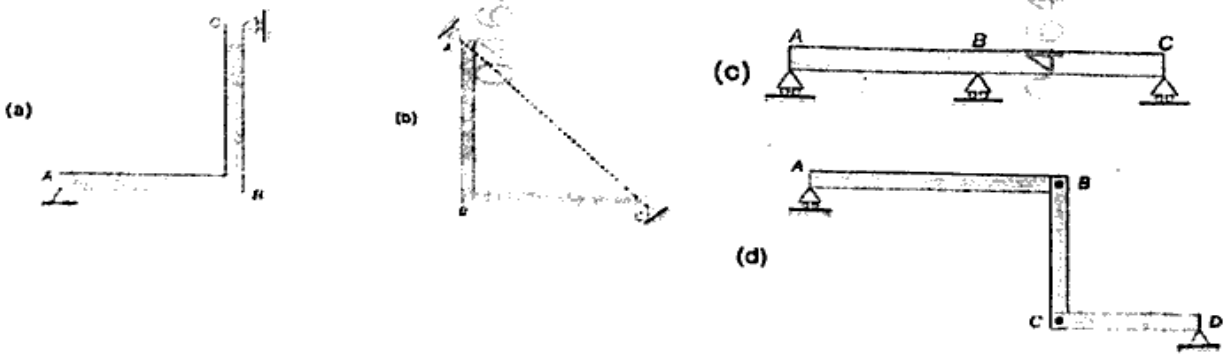

https://www.batuonline.com

10 The slope-deflection method is best suited for analyzing ------
a) Trusses b) Beams and frames with negligible joint translations
c) Space frames d) Structures with significant joint translations

11 In the moment distribution method, when the distribution factor for a member is calculated, stiffness of the member is represented by---
a) The flexural rigidity of the member b) The length of the beam
c) The modulus of elasticity d) The deflection of the member

12 In moment distribution method, iterative process continues until ---
a) The sum of moments at all joints is zero
b) The unbalanced moments at all joints are within acceptable limits.
c) The distribution factors at all joints become equal.
d) The carryover factors at all joints become zero.

Q2. Solve the following.

A) Enlist the different methods to find deflection in beams and explain in detail any one method. 6

B) A cantilever beam of span 5 m is subjected to a concentrated load of 100 kN applied at the free end. Assume **EI, the flexural** rigidity of the beam, is constant. Calculate the **maximum deflection** at the free end of the beam in terms of EI. 6

Q3. Solve the following.

A) Explain the concept of 'static & kinematic indeterminacy' with examples. 6

B) Determine the deflection at the free end of a cantilever beam of length 5 m subjected to a point load of 100 kN at the free end. Use the **strain energy method**. Assume uniform flexural rigidity as 'EI.' 6

Q4. Solve Any Two of the following.

A) Determine the reactions at the propped end for a propped cantilever beam of span 10 m subjected to a uniformly distributed load of 5 kN/m. Also find the bending moment at the fixed end. 6

B) A fixed beam of span 'L' m is subjected to point load '**W**' kN at the midspan. Draw shear force diagram (SFD) and bending moment diagram (BMD). Locate the point of contraflexure. Assume flexural rigidity EI is constant. Use a consistent deformation method. 6

C) A fixed beam of span '10 m' is subjected to UDL '50' kN/m throughout the span. Find SFD and BMD. Locate the point of contraflexure. Flexural rigidity EI is constant. Use a consistent deformation method. 6

Q5. Solve Any Two of the following.

A) State and explain the theorem of three moments. 6

B) Explain the following terms: 6
A) Carry over moment B) Carry factor C) Stiffness factor

C) Analyze the two-span continuous beam ABC as shown in the figure below by the moment distribution method and draw the BMD & deflection profile. 6

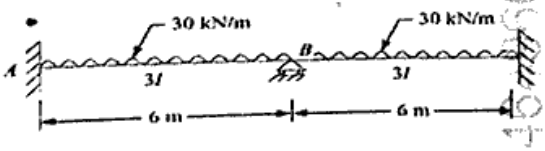

Q6. Solve Any Two of the following.

A) State and explain the assumptions made in the slope deflection method (SDM) while developing this method. 6

B) Develop slope deflection equations for a two-span continuous beam ABC having each span (AB & BC) of length '4 m' subjected to a UDL of 10 kN/m. Support A is hinged, and B and C are rollers. Assume constant EI. 6

C) Analyze the two-span continuous beam ABC by the slope deflection method, having both ends as fixed ones. Span AB is having 4 m length, M.I. as 'I,' and a subjected central point load of 40 kN. Span BC is having a 6 m length, M.I. as '2I,' and is subjected to a UDL of 20 kN/m over the entire span BC. Draw the BMD & elastic curve/deflection profile. 6

https://www.batuonline.com